EURASIA POWER

YSDH480 SERIES 480W

Eurasia Power's higher performance family of single phase DIN rail power supplies were designed with metal housing and for full range AC input from 90VAC to 264VAC. With higher efficiency, the entire series have built-in DC OK relay contact and higher peak power, they also operate in wide temperature range.
The series offer diverse solutions for demanding automation around the world.

Features

- Higher Peak Power
- Current sharing up to 3840W(7+1)
- Built-in DC Ok Relay Contact
- Built-in Active PFC Function
- DC Output Voltage Adjustable
- Three Years Warranty

Model Information

Yingjiao Part number	DC VOLTAGE	RATED CURRENT (Max.)	RATED POWER	PEAK POWER (Note.4)	VOLTAGE ADJ. RANGE
YSDH480-24020000	24V	20A	480W	720W (3sec.)	24-28V
YSDH480-48010000	48V	10A	480W	720W (3sec.)	48-55V

Input

VOLTAGE RANGE	90 ~ 264VAC, 127 ~ 370VDC
FREQUENCY RANGE	47 ~ 63Hz
POWER FACTOR (Typ.)	0.94/230VAC at full load 0.99/115VAC at full load
EFFICIENCY (Typ.)	94%
AC CURRENT (Typ.)	5A/115VAC 2.5A/230VAC
INRUSH CURRENT (Typ.)	40A/115VAC 80A/230VAC
LEAKAGE CURRENT	<0.6mA / 240VAC

Output

RIPPLE & NOISE (max.) (Note.2)	100mVp-p YSDH480-24020000 120mVp-p YSDH480-48001000
VOLTAGE TOLERANCE	±2.0%
LINE REGULATION	±0.5%
LOAD REGULATION	±1.0%
SETUP, RISE TIME	1500ms, 150ms/230VAC at full load 3000ms, 150ms/115VAC at full load
HOLD UP TIME (Typ.)	14ms/230VAC at full load

Protection

OVER LOAD	Normally works within 110 ~ 150% rated output power for more than 3 seconds and then shut down o/p voltage with auto-recovery >150% rated power, constant current limiting with auto-recovery within 3 seconds and may cause to shut down if over 3 seconds
OVER VOLTAGE	29 ~ 33V YSDH480-24020000 56 ~ 65V YSDH480-48001000 Protection type : Shut down o/p voltage, re-power on to recover
OVER TEMPERATURE	105℃ ±5℃ (TSW) detect on heatsink of power switch Protection type : Shut down o/p voltage, recovers automatically after temperature goes down

Function

DC OK REALY CONTACT RATINGS (max.)	60Vdc/0.3A, 30Vdc/1A, 30Vac/0.5A resistive load

Environment

WORKING TEMP. (Note.5)	-25 ~ +70℃ (Refer to "Derating Curve")
WORKING HUMIDITY	20 ~ 95% RH non-condensing
STORAGE TEMP., HUMIDITY	-40 ~ +85℃, 10 ~ 95% RH
MTBF	969.8K hrs min. Telcordia SR-332 (Bellcore) ; 118.6K hrs min. MIL-HDBK-217F (25℃)
TEMP. COEFFICIENT	±0.03%/℃ (0 ~ 50℃)
VIBRATION	Component:10 ~ 500Hz, 2G 10min./1cycle, 60min. each along X, Y, Z axes; Mounting: Compliance to IEC60068-2-6

Safety and Electromagnetic Compatibility

SAFETY STANDARDS	UL508, BS/EN62368-1
WITHSTAND VOLTAGE	I/P-O/P:3KVAC I/P-FG:2KVAC O/P-FG:0.5KVAC O/P-DC OK:0.5KVAC
ISOLATION RESISTANCE	I/P-O/P, I/P-FG, O/P-FG:>100M Ohms / 500VDC / 25℃ / 70% RH
EMC EMISSION	Compliance to BS EN/EN55032 , BS EN/EN61000-3-2,-3
EMC IMMUNITY	Compliance to BS EN/EN61000-4-2,3,4,5,6,8,11, BS EN/EN55024, BS EN/EN61000-6-2 (BS EN/EN50082-2), BS EN/EN61204-3, heavy industry level

Note

1. All parameters NOT specially mentioned at 230VAC input, rated load and 25℃ of ambient temperature.
2. Ripple&noise are measured from peak to peak with band width limit of 20MHz(0.1uF and 47uF/50V parallel capacitor under DC output full load,AC nominal input 25℃ ambient temperature).
3. Installation clearances: top with 40mm, bottom with 20mm, left and righ with 5mm. Increase the space to 10-15mm when the adjacent device is heat source.
4. It could hold up 3 seconds max when reached peak power 720W, please refer to peak loading curves.
5. Derating may be needed under low input voltage. Please check the derating curve for more details.
6. After 30 minutes of burn-in.
7. The ambient temperature derating of 3.5 ℃/1000m for operating altitude higher than 2000m(6500ft).

Dimensions & Weight

Length:	85.5mm / 3.37in
Width:	125mm / 4.92in
Height:	129mm / 5.08in
Weight:	1.6kg

Packing

Carton Size:	49 x 34.5 x 16.5 CM 19.29 x 13.58 x 6.50 in
Master Carton Quantities:	8pcs / Carton

Mechanical Specification

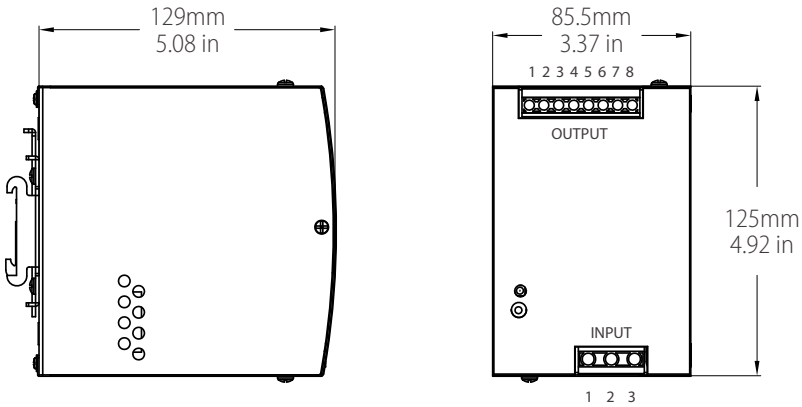

Input

No.	Description
1	FG ⏚
2	AC/N
3	AC/L

Output

No.	Description
1,2	DC OUTPUT +V
3,4	DC OUTPUT -V
5,6	Relay Contact
7	P+ (currene share)
8	P- (currene share)

Block Diagram

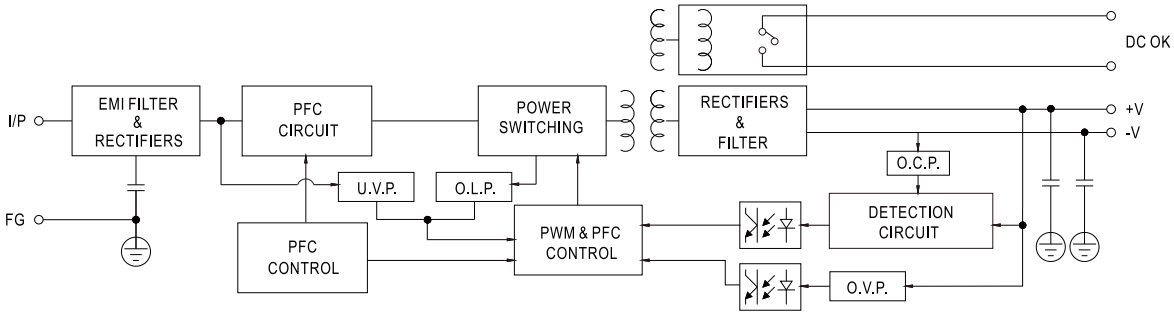

DC OK Relay Contact

Contact Close	PSU turns on / DC OK.
Contact Open	PSU turns off / DC Fail.
Contact Ratings (max.)	30V/1A resistive load.

Peak Loading

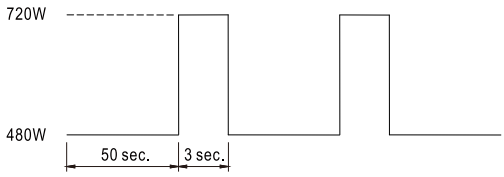

Full Load

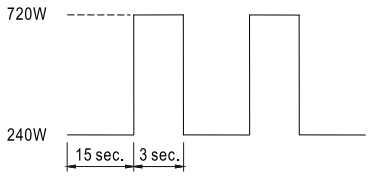

Half Load

Derating Curve

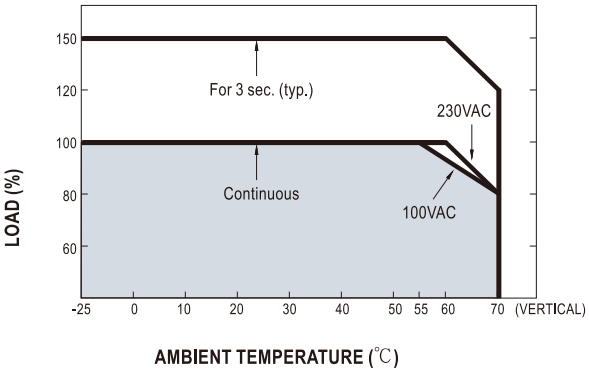

Static Characteristics

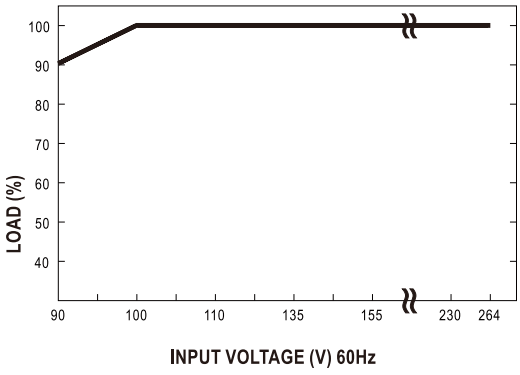

Note

Current Sharing

1. Connection type of parallel operation is as follows (P+,P- parallel connection)
2. The output voltage difference between the parallel units should be less than 0.2V
3. The total output current must not exceed the value calculated of the following equation

   (Output current at parallel operation)=(The rated current per unit)* (Number of unit) x 0.9
4. The maximum quantity of parallel operation is eight units, If need more quantity of parallel operation, please contact the manufacture.
5. In parallel connection, the minimum output load should be more than 3% of total output load
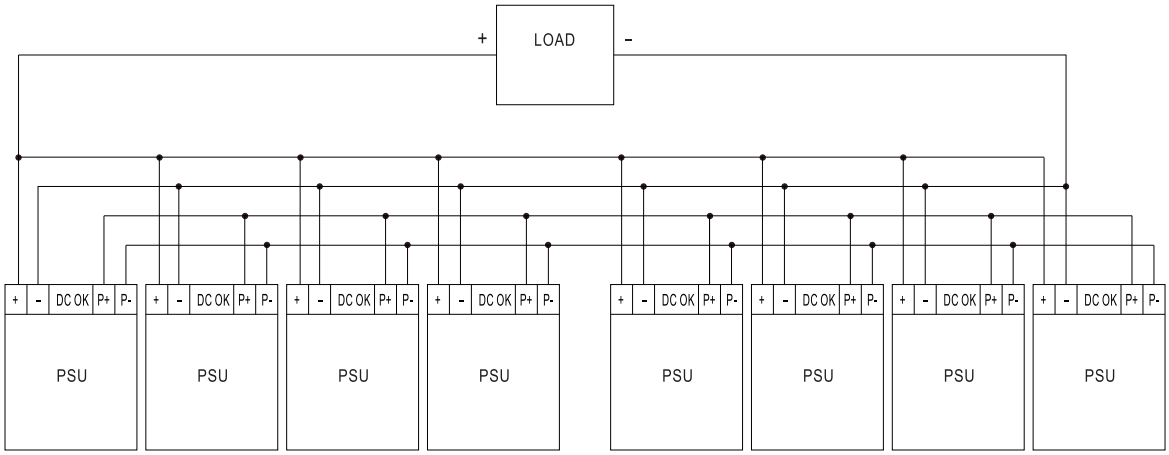
   (Min. load > 3% rated current per unit x number of unit)